INDICATORS AND DRIVER INFORMATION CENTER (DIC)

Component Index

Body Control Module (BCM)
Brake Fluid Level Switch
Electronic Brake Control Module (EBCM)
Fuse Block-Rear
Fuse Block-Underhood
Inflatable Restraint Steering Wheel Module Coil
Instrument Panel Cluster (IPC)
Park Brake Switch
Powertrain Control Module (PCM) (4.2L)
Powertrain Control Module (PCM) (5.3L)
SP201
Steering Wheel Control Assembly

INDICATORS AND DRIVER INFORMATION CENTER (DIC)

Circuit Schematic

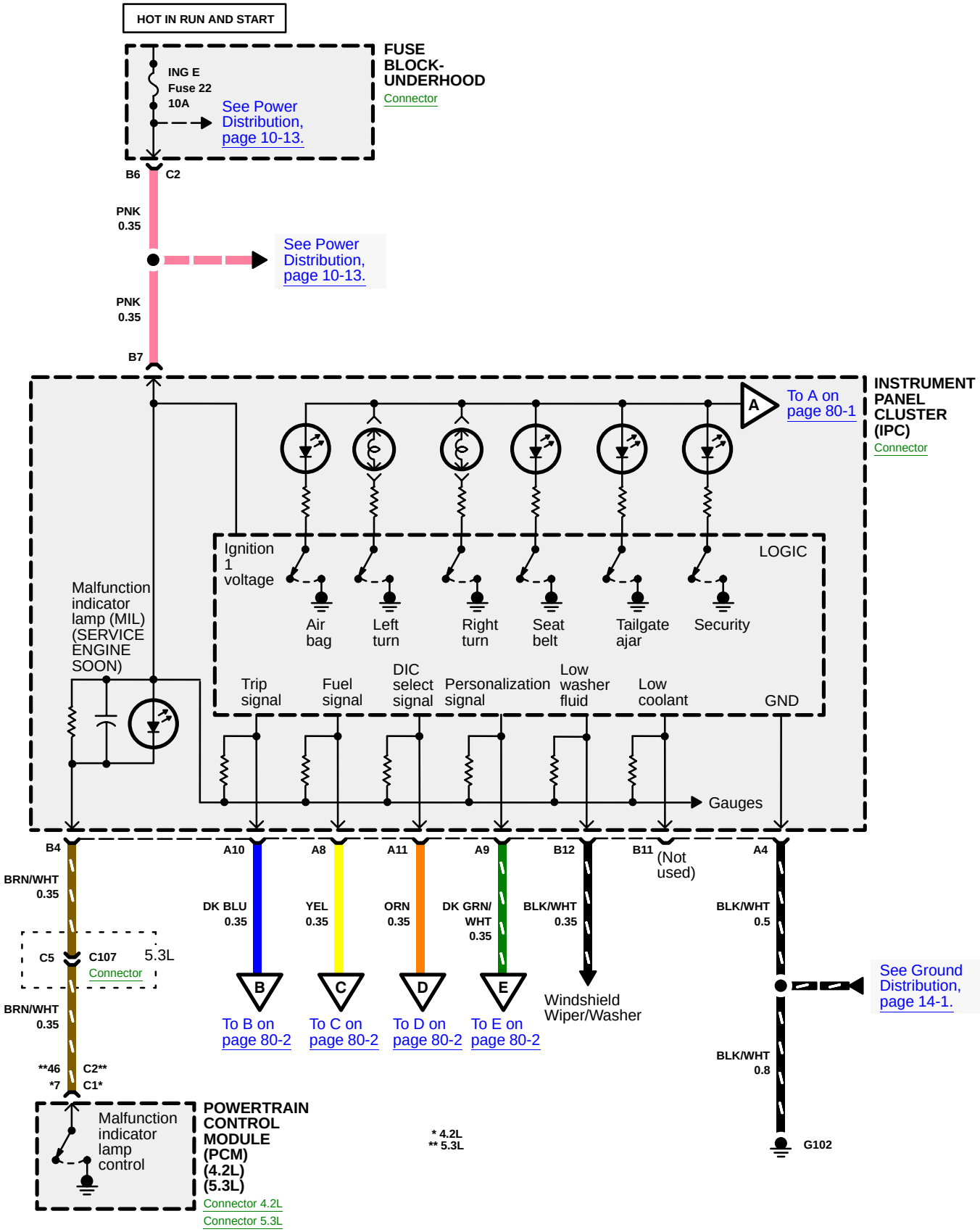

INDICATORS AND DRIVER INFORMATION CENTER (DIC)

Circuit Schematic

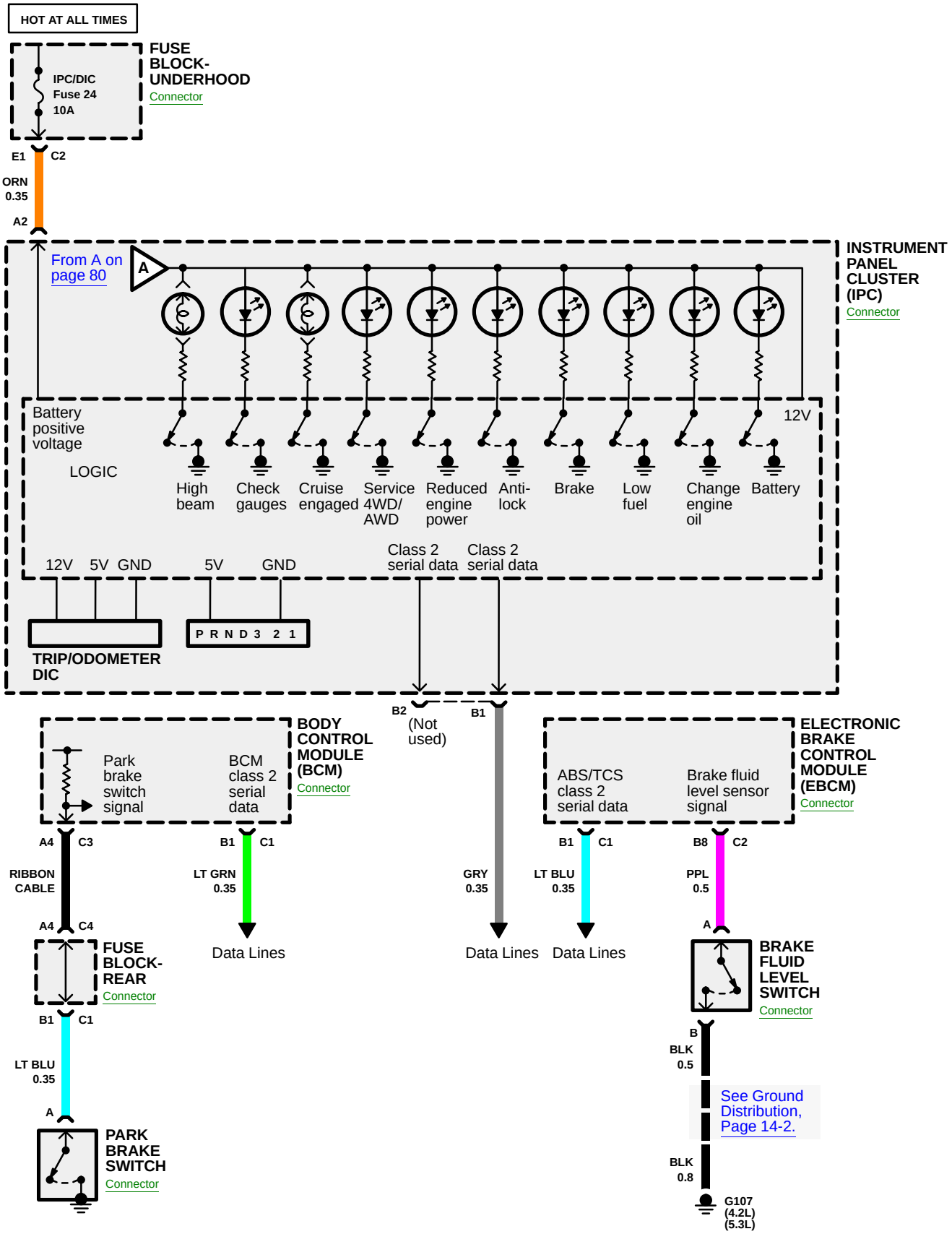

INDICATORS AND DRIVER INFORMATION CENTER (DIC)

Circuit Schematic

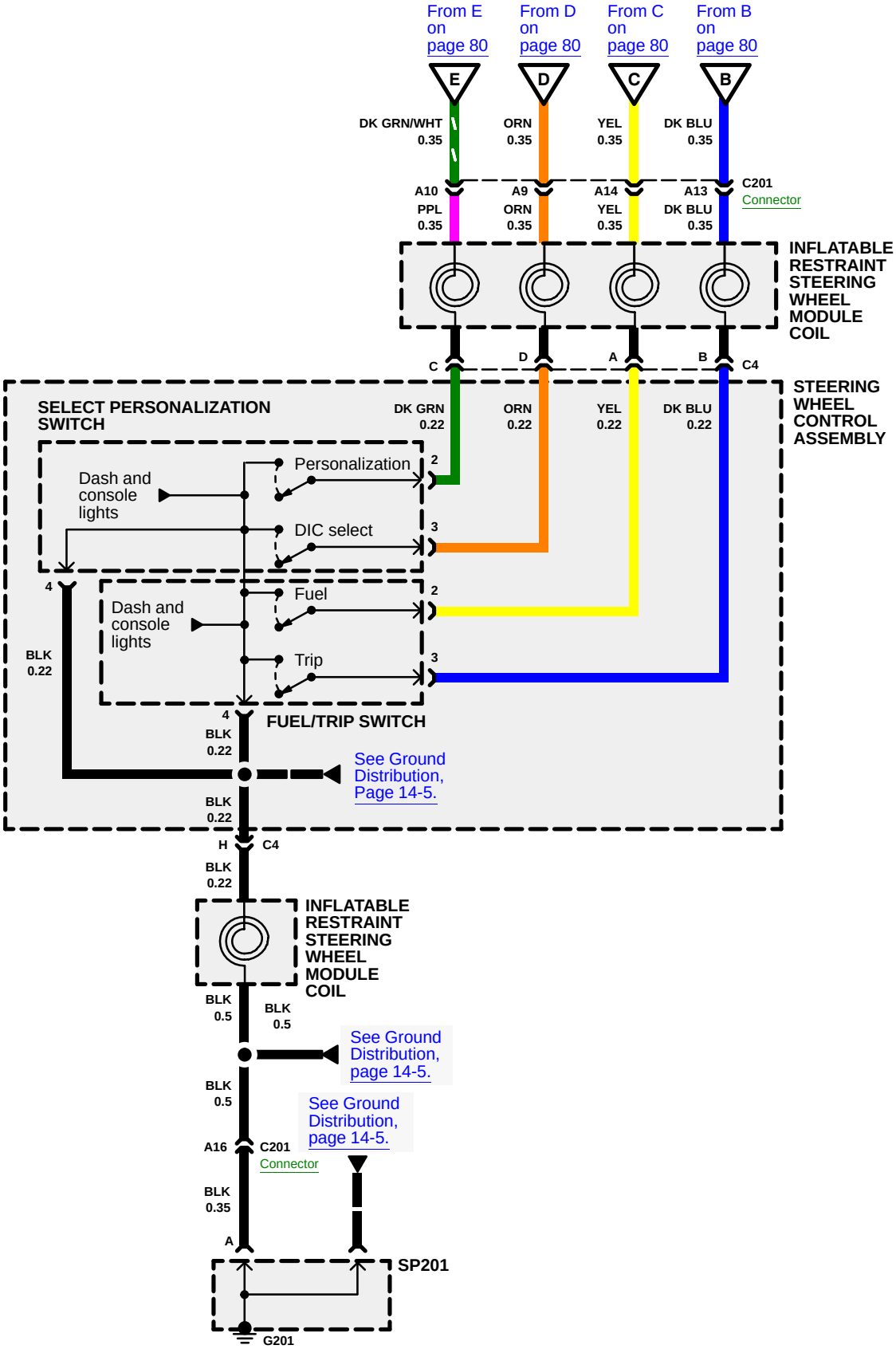

INDICATORS AND DRIVER INFORMATION CENTER (DIC)

Circuit Operation

Engine Coolant Temperature Gauge

The IPC displays the engine coolant temperature as determined by the PCM. The IPC receives a class 2 message from the PCM indicating the engine coolant temperature. The engine coolant temperature gauge defaults to 100°F (40°C) or below if:

- The PCM detects a malfunction in the engine coolant temperature sensor circuit.
- The IPC detects a loss of class 2 communications with the PCM.

Engine Oil Pressure Gauge

The IPC displays the engine oil pressure as determined by the PCM. The IPC receives a class 2 message from the PCM indicating the engine oil pressure. The engine oil pressure gauge defaults to 0 psi (0 kPa) or below if:

- The PCM detects a malfunction in the engine oil pressure sensor circuit.
- The IPC detects a loss of class 2 communications with the PCM.

Fuel Gauge

The IPC displays the fuel level as determined by the PCM. The IPC receives a class 2 message from the PCM indicating the fuel level percent. The fuel gauge defaults to empty if:

- The PCM detects a malfunction in the fuel level sensor circuit.
- The IPC detects a loss of class 2 communications with the PCM.

When the fuel level is less than a pre-determined value, the IPC illuminates the low fuel indicator.

Odometer

The base IPC contains a season odometer and a trip odometer. The uplevel IPC contains a season odometer and two trip odometers. Momentarily press the trip/reset switch on the IPC in order to toggle between the season odometer and the trip odometer. Press the trip/reset switch for greater than 2 seconds, while the trip odometer is displayed, in order to reset the trip odometer.

The IPC calculates the mileage based on the vehicle speed signal circuit from the PCM. The odometer will display 'error' if an internal IPC memory failure is detected. The odometer displays either miles or kilometers as requested by the activation of the Personalization button on the steering wheel controls.

PRND321 Display

The IPC displays the selected gear position as determined by the PCM. The IPC receives a class 2 message from the PCM indicating the gear position. The PRND321 display blinks if:

- The PCM detects a malfunction in the transmission range switch circuit.
- The IPC detects a loss of class 2 communications with the PCM.

Speedometer

The IPC displays the vehicle speed based on the information from the PCM. The PCM converts the data from the vehicle speed sensor to a 4000 pulses/mile signal. The IPC uses the vehicle speed signal circuit (4000 pulses/mile) from the PCM in order to calculate the vehicle speed. If the IPC detects a malfunction in the vehicle speed signal circuit, the IPC uses the class 2 message from the PCM indicating the vehicle speed.

Tachometer

The IPC displays the engine speed based on the information from the PCM. The PCM converts the data from the engine speed sensor to a 2 pulses/engine revolution signal. The IPC uses the engine speed signal circuit (2 pulses/engine revolution) from the PCM in order to calculate the engine speed. If the IPC detects a malfunction in the engine speed signal circuit, the IPC uses the class 2 message from the PCM indicating the engine speed.

Voltmeter

The IPC displays the vehicle voltage based on the information from the BCM. The IPC uses class 2 serial data information from the BCM to provide a voltage level indication on the voltmeter.

INDICATORS AND DRIVER INFORMATION CENTER (DIC)

Component Location Index

(Refer to Section 201 for photographs.)

Component		Photo No.
Body Control Module (BCM)	On Rear Fuse Block, under left rear seat	53
Brake Fluid Level Switch	Left side of engine compartment	3
Electronic Brake Control Module (EBCM)	Inner left side frame rail (near transmission)	41
Fuse Block-Rear	Under the left rear seat	52
Fuse Block-Underhood	Left side of engine compartment	3
Inflatable Restraint Steering Wheel Module Coil	In center hub of steering wheel	
Instrument Panel Cluster (IPC)	On the left side of the IP, above the steering column	59
Park Brake Switch	In lower console, on park brake assembly	62
Powertrain Control Module (PCM) (4.2L)	Left front of engine	5
Powertrain Control Module (PCM) (5.3L)	Left front of engine compartment	25
SP201	Near right front of lower console	80
Steering Wheel Control Assembly	In the steering wheel hub	66
Connector		
C107 (5.3L) (38-BLK)	Left rear of engine compartment	18
C201 (17-BLK), (18-BLK), and (13-GRY)	At base of steering column	120
Ground		
G102	Left side of engine compartment	4
G107 (4.2L)	Lower left side of engine	37
G107 (5.3L)	Lower left side of engine	38
G201	Near right front of lower console	80